LOCUS MAP

NOT TO SCALE

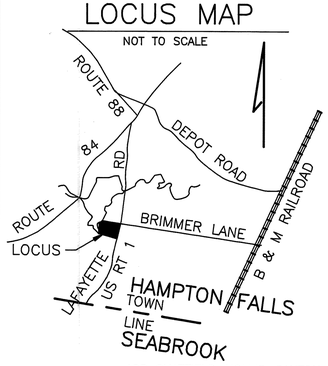

SOIL CLASS: 40B CHATFIELD–HOLLIS–CANTON
299 UDORTHENTS, SMOOTHED
538A SQUAMSCOTT
(SOURCE: USDA–SCS SOIL SURVEY) SEE SHEET 2

BENCH MARKS:

	USGS	DATUM
#1 FOUND RAILROAD SPIKE ELEV 21.75		
#2 TOP OF FOUND IRON PIN ELEV 14.67		

DESIGN INTENT: BED BOTTOM TO BE PLACED NO LOWER THAN 18" BELOW EXISTING GRADE, UPSLOPE SIDE (EXIS GRADE = EL 22.5).

SUITABLE REPLACEMENT AREA:
SYSTEM MUST BE REBUILT IN PLACE OR REDESIGNED.

LEGEND:

- (50) EXISTING CONTOUR
- 50 PROPOSED CONTOUR
- 50.0 EXISTING SPOT ELEVATION
- (50.0) PROPOSED SPOT ELEVATION

NOTES:

1. THIS PLAN IS NOT TO BE CONSTRUED AS A BOUNDARY SURVEY. PROPERTY LINES SHOWN ARE APPROXIMATED BASED ON INFORMATION FROM THE FOLLOWING SOURCE: RCRD PLAN #D23707
2. NHDES–WS&PCD SUBDIVISION APPROVAL NUMBER: N/A LOT OF RECORD
3. THIS SYSTEM IS NOT DESIGNED TO HANDLE GARBAGE DISPOSAL WASTE.
4. NO SURFACE WATER OR WELL WITHIN 75' OF PROPOSED SYSTEM.
5. THE PURPOSE OF THIS PLAN IS TO COMPLY WITH ENV WS 1003.10 ONLY. SEE SHEET 2 NOTE 6. PROPOSED SYSTEM TO BE INSTALLED ONLY IN EVENT OF FAILURE OF EXISTING SYSTEM.

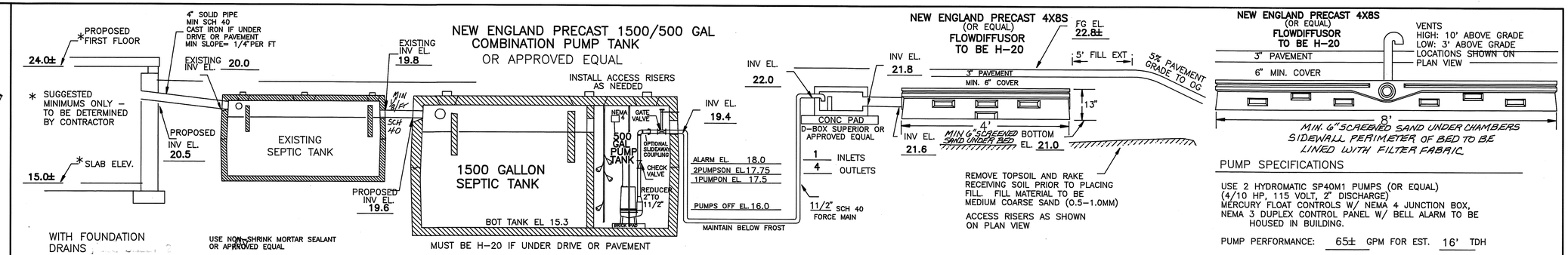

CROSS SECTION DISPOSAL SYSTEM – NOT TO SCALE

PUMP SPECIFICATIONS

USE 2 HYDROMATIC SP40M1 PUMPS (OR EQUAL) (4/10 HP, 115 VOLT, 2" DISCHARGE)
MERCURY FLOAT CONTROLS W/ NEMA 4 JUNCTION BOX,
NEMA 3 DUPLEX CONTROL PANEL W/ BELL ALARM TO BE HOUSED IN BUILDING.

PUMP PERFORMANCE: 65± GPM FOR EST. 16' TDH

RUNNING TIME 3± MIN. FOR 190 GAL PER CYCLE

CYCLES PER DAY 5± BASED ON 975GPD LOADING

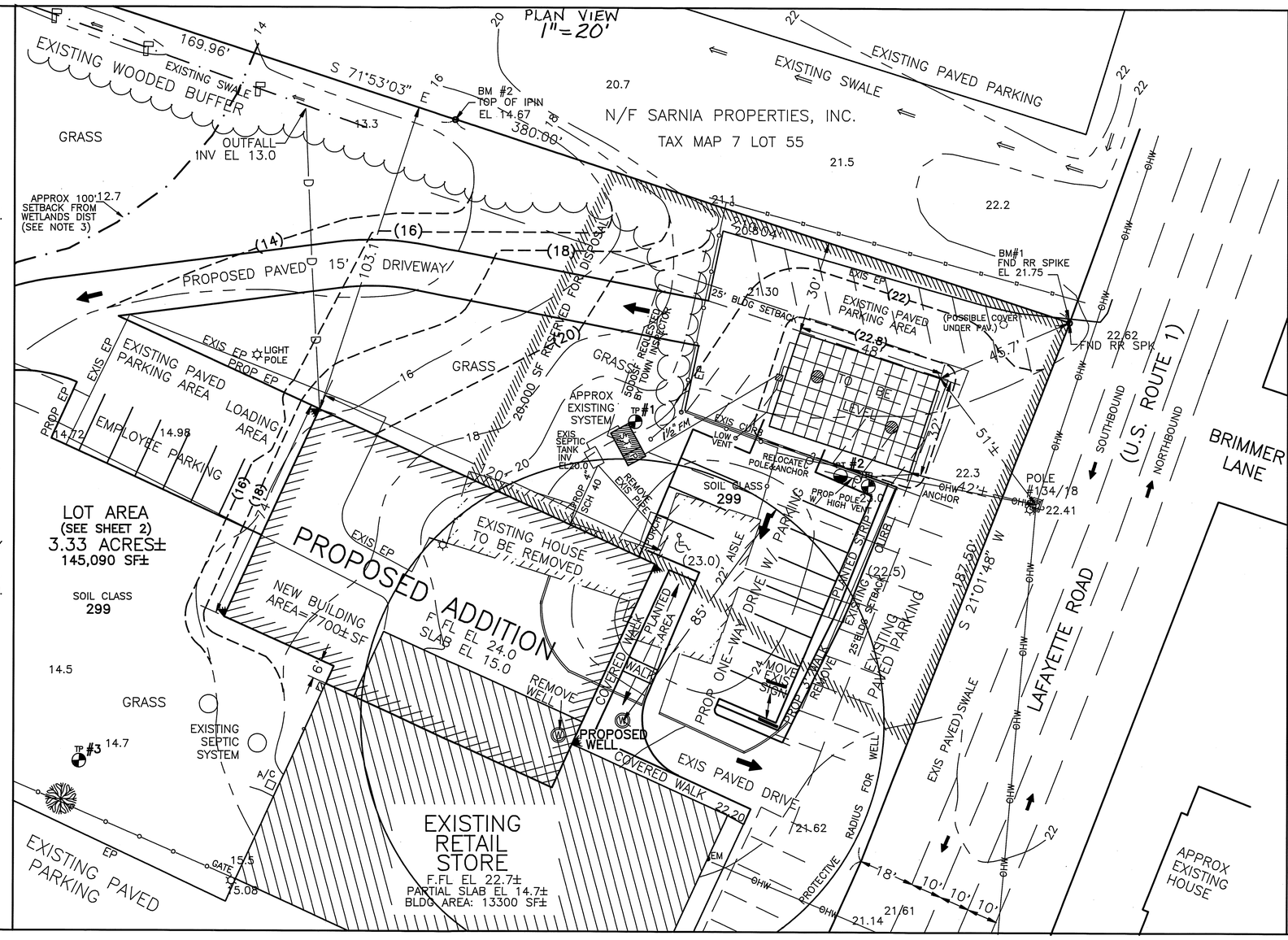

PLOT PLAN

1"=APPROX_____

TEST PIT DATA

DATE: 10/11/95
TOWN INSPECTOR: MIKE CUOMO

#1 ELEV 21.5

0–12"	OLD FILL, 10YR4/6 GRAVELLY FINE SANDY LOAM GRANULAR FRIABLE
12–24"	10YR4/4 FINE SANDY LOAM, GRANULAR FRIABLE (ORIGINAL TOPSOIL)
24–54"	10YR6/6 GRAVELLY FINE SANDY LOAM, GRAN. FRIABLE
54–84"	2.5Y5/4 GRAVELLY LOAMY SAND, BLOCKY FRIABLE, MOTTLED

ESHWT @ 54", ROOTS TO 5', NO OBS H2O, NO REFUSAL

#2 ELEV 23.0

0–28"	10YR3/6 FINE SANDY LOAM, GRANULAR FRIABLE
28–56"	10YR5/6 FINE SANDY LOAM, GRANULAR FRIABLE
56–78"	10YR6/4 VERY FINE SAND, GRANULAR FRIABLE
78–108"	2.5Y5/4 GRAVELLY LOAMY SAND, BLOCKY FRIABLE

ESHWT @ 78", ROOTS TO 5'+, NO OBS H2O, NO REFUSAL

#3

MIXED FILL OVER SILTY CLAY LOAM
ESHWT @ <24"

PERC TEST DATA

DATE 10/11/95 PERC RATE: 2 MIN/IN

DESIGN LOADING:
TOTAL RETAIL SPACE (19500SF±) AT 5 GPD/100SF EQUALS 5X195=975 GPD DESIGN LOADING.

AREA REQUIRED:
975/100=9.75X125SFPER 100GPD=1219SF
1219SFX1.25(HAMPTON FALLS) = 1524 SF REQUIRED

AREA PROPOSED:
USE 48 FLOWDIFFUSOR 4X8S CHAMBER FOR BED CONFIGURATION OF 32'X48' FOR TOTAL AREA OF 1536 SF PROVIDED.

PROPOSED
SEPTIC SYSTEM PLAN
(FOR INSTALLATION IN EVENT OF EXISTING SYSTEM FAILURE)

LOCUS: 34 LAFAYETTE ROAD
HAMPTON FALLS, NH

OWNER: SEACOAST BARGAINS, INC.
34 LAFAYETTE ROAD
HAMPTON FALLS, NH 03844

NEW HAMPSHIRE Designer of Subsurface Disposal Systems
Ann W. Bialebrzeski No. 348
Water Supply & Pollution Control

APPLICANT:
STOCKTON SERVICES
PO BOX 1306
HAMPTON, NH 03842

DATE: 10/17/95
APPROVAL: CA199600002

205 SHEET 1 OF 2
SHEET 2 = SITE PLAN

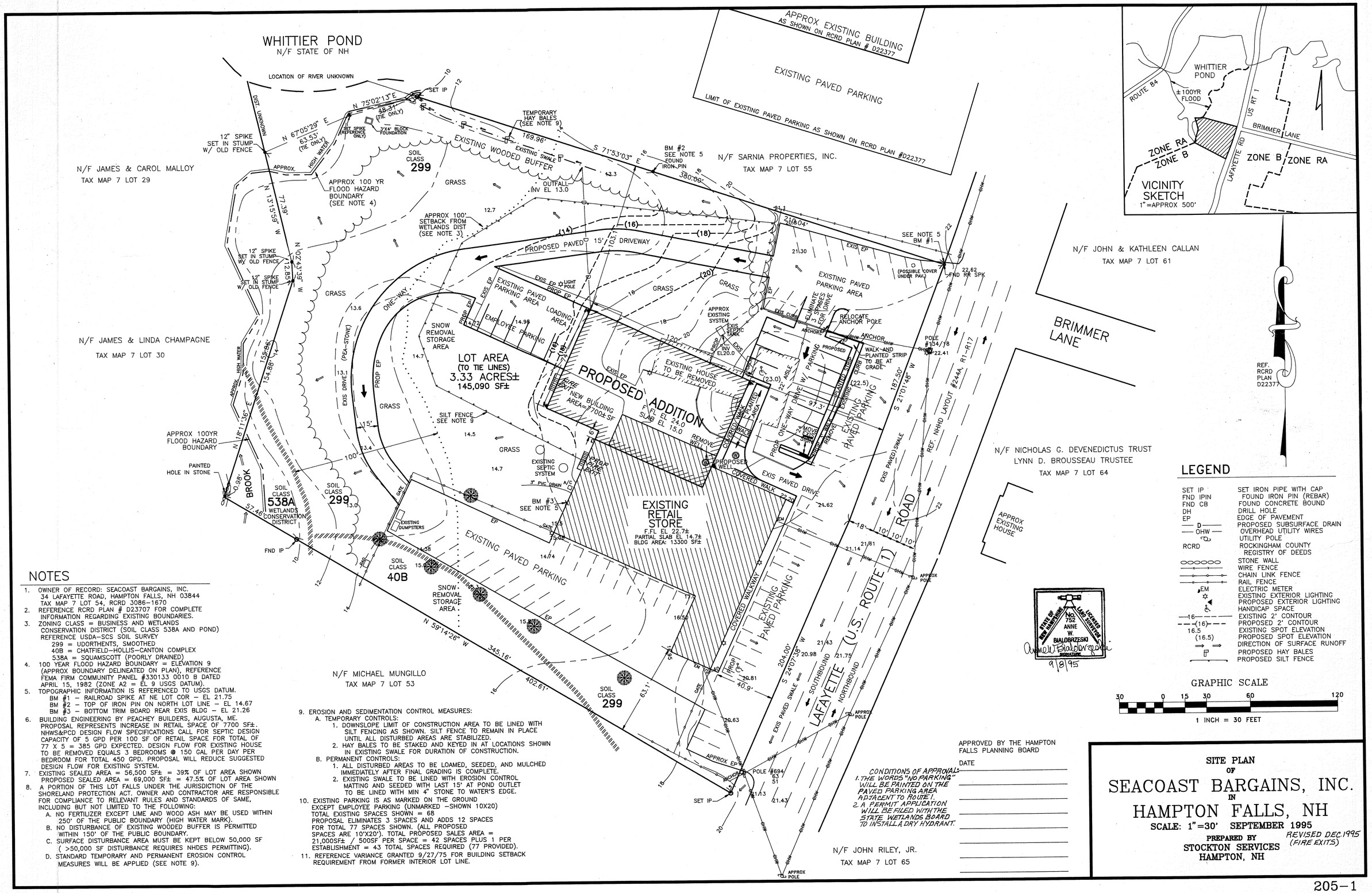

NOTES

1. OWNER OF RECORD: SEACOAST BARGAINS, INC.
   34 LAFAYETTE ROAD, HAMPTON FALLS, NH 03844
   TAX MAP 7 LOT 54, RCRD 3086-1670
2. REFERENCE RCRD PLAN # D23707 FOR COMPLETE INFORMATION REGARDING EXISTING BOUNDARIES.
3. ZONING CLASS = BUSINESS AND WETLANDS CONSERVATION DISTRICT (SOIL CLASS 538A AND POND)
   REFERENCE USDA-SCS SOIL SURVEY
   299 = UDORTHENTS, SMOOTHED
   40B = CHATFIELD-HOLLIS-CANTON COMPLEX
   538A = SQUAMSCOTT (POORLY DRAINED)
4. 100 YEAR FLOOD HAZARD BOUNDARY = ELEVATION 9 (APPROX BOUNDARY DELINEATED ON PLAN), REFERENCE FEMA FIRM COMMUNITY PANEL #330133 0010 B DATED APRIL 15, 1982 (ZONE A2 = EL 9 USGS DATUM).
5. TOPOGRAPHIC INFORMATION IS REFERENCED TO USGS DATUM.
   BM #1 - RAILROAD SPIKE AT NE LOT COR - EL 21.75
   BM #2 - TOP OF IRON PIN ON NORTH LOT LINE - EL 14.67
   BM #3 - BOTTOM TRIM BOARD REAR EXIS BLDG - EL 21.26
6. BUILDING ENGINEERING BY PEACHEY BUILDERS, AUGUSTA, ME. PROPOSAL REPRESENTS INCREASE IN RETAIL SPACE OF 7700 SF±. NHWS&PCD DESIGN FLOW SPECIFICATIONS CALL FOR SEPTIC DESIGN CAPACITY OF 5 GPD PER 100 SF OF RETAIL SPACE FOR TOTAL OF 77 X 5 = 385 GPD EXPECTED. DESIGN FLOW FOR EXISTING HOUSE TO BE REMOVED EQUALS 3 BEDROOMS @ 150 GAL PER DAY PER BEDROOM FOR TOTAL 450 GPD. PROPOSAL WILL REDUCE SUGGESTED DESIGN FLOW FOR EXISTING SYSTEM.
7. EXISTING SEALED AREA = 56,500 SF± = 39% OF LOT AREA SHOWN
   PROPOSED SEALED AREA = 69,000 SF± = 47.5% OF LOT AREA SHOWN
8. A PORTION OF THIS LOT FALLS UNDER THE JURISDICTION OF THE SHORELAND PROTECTION ACT. OWNER AND CONTRACTOR ARE RESPONSIBLE FOR COMPLIANCE TO RELEVANT RULES AND STANDARDS OF SAME, INCLUDING BUT NOT LIMITED TO THE FOLLOWING:
   A. NO FERTILIZER EXCEPT LIME AND WOOD ASH MAY BE USED WITHIN 250' OF THE PUBLIC BOUNDARY (HIGH WATER MARK).
   B. NO DISTURBANCE OF EXISTING WOODED BUFFER IS PERMITTED WITHIN 150' OF THE PUBLIC BOUNDARY.
   C. SURFACE DISTURBANCE AREA MUST BE KEPT BELOW 50,000 SF (>50,000 SF DISTURBANCE REQUIRES NHDES PERMITTING).
   D. STANDARD TEMPORARY AND PERMANENT EROSION CONTROL MEASURES WILL BE APPLIED (SEE NOTE 9).
9. EROSION AND SEDIMENTATION CONTROL MEASURES:
   A. TEMPORARY CONTROLS:
      1. DOWNSLOPE LIMIT OF CONSTRUCTION AREA TO BE LINED WITH SILT FENCING AS SHOWN. SILT FENCE TO REMAIN IN PLACE UNTIL ALL DISTURBED AREAS ARE STABILIZED.
      2. HAY BALES TO BE STAKED AND KEYED IN AT LOCATIONS SHOWN IN EXISTING SWALE FOR DURATION OF CONSTRUCTION.
   B. PERMANENT CONTROLS:
      1. ALL DISTURBED AREAS TO BE LOAMED, SEEDED, AND MULCHED IMMEDIATELY AFTER FINAL GRADING IS COMPLETE.
      2. EXISTING SWALE TO BE LINED WITH EROSION CONTROL MATTING AND SEEDED WITH LAST 15' AT POND OUTLET TO BE LINED WITH MIN 4" STONE TO WATER'S EDGE.
10. EXISTING PARKING IS AS MARKED ON THE GROUND EXCEPT EMPLOYEE PARKING (UNMARKED -SHOWN 10X20) TOTAL EXISTING SPACES SHOWN = 68 PROPOSAL ELIMINATES 3 SPACES AND ADDS 12 SPACES FOR TOTAL 77 SPACES SHOWN. (ALL PROPOSED SPACES ARE 10'X20'). TOTAL PROPOSED SALES AREA = 21,000SF± / 500SF PER SPACE = 42 SPACES PLUS 1 PER ESTABLISHMENT = 43 TOTAL SPACES REQUIRED (77 PROVIDED).
11. REFERENCE VARIANCE GRANTED 9/27/75 FOR BUILDING SETBACK REQUIREMENT FROM FORMER INTERIOR LOT LINE.